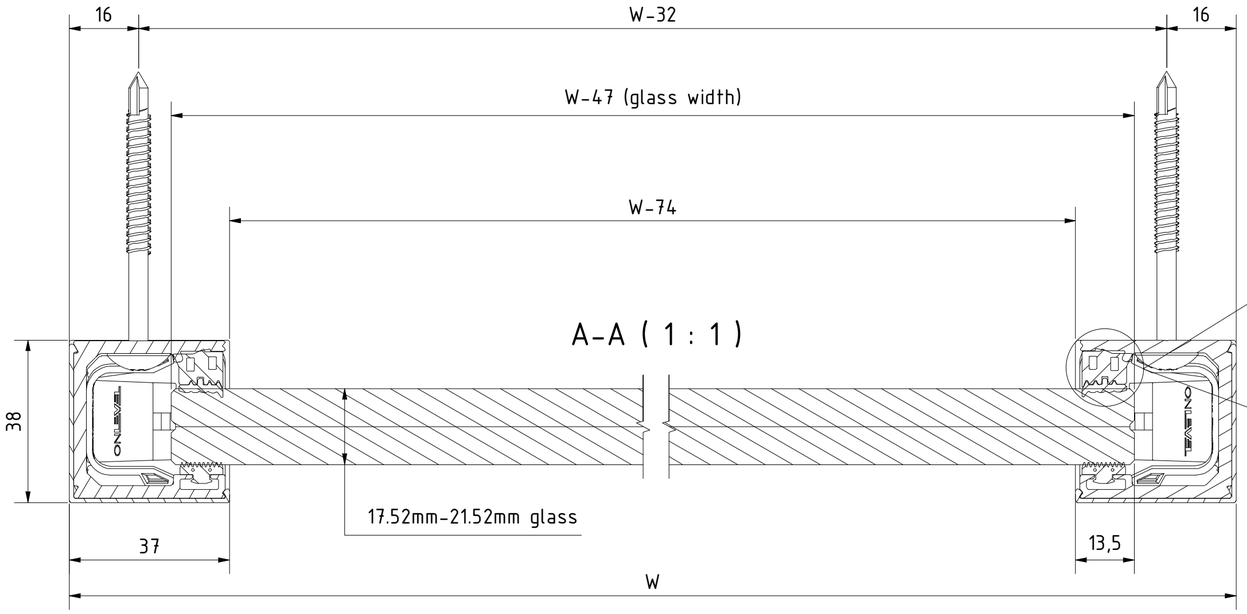

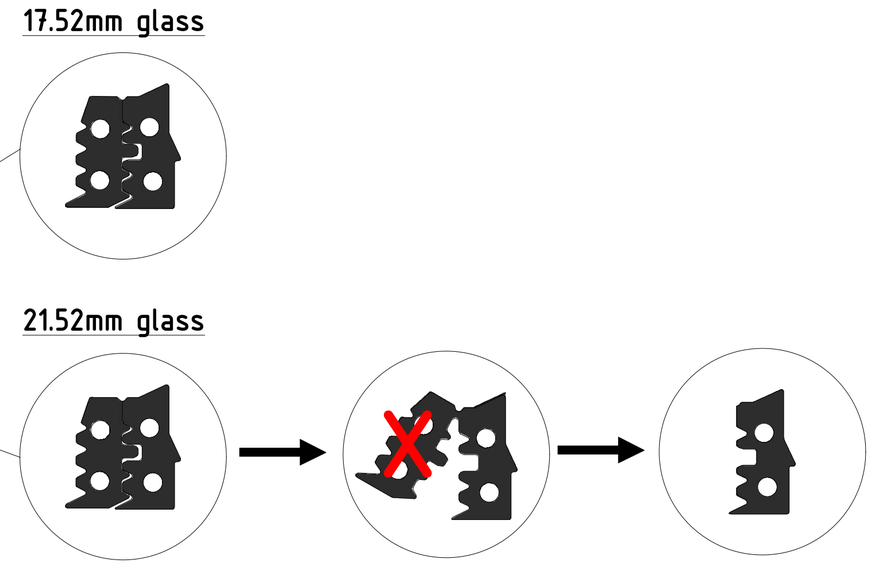

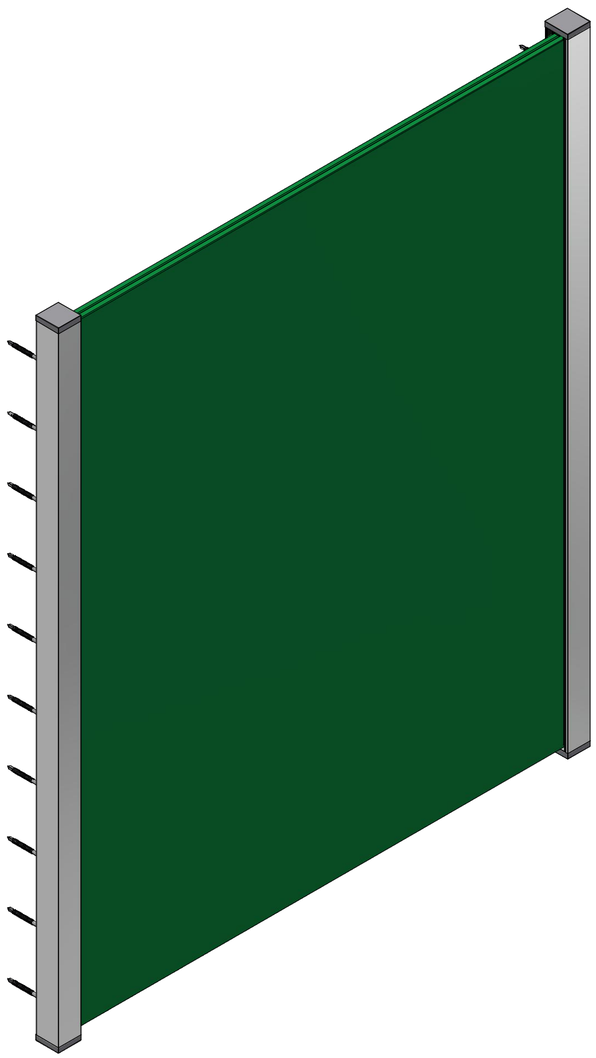

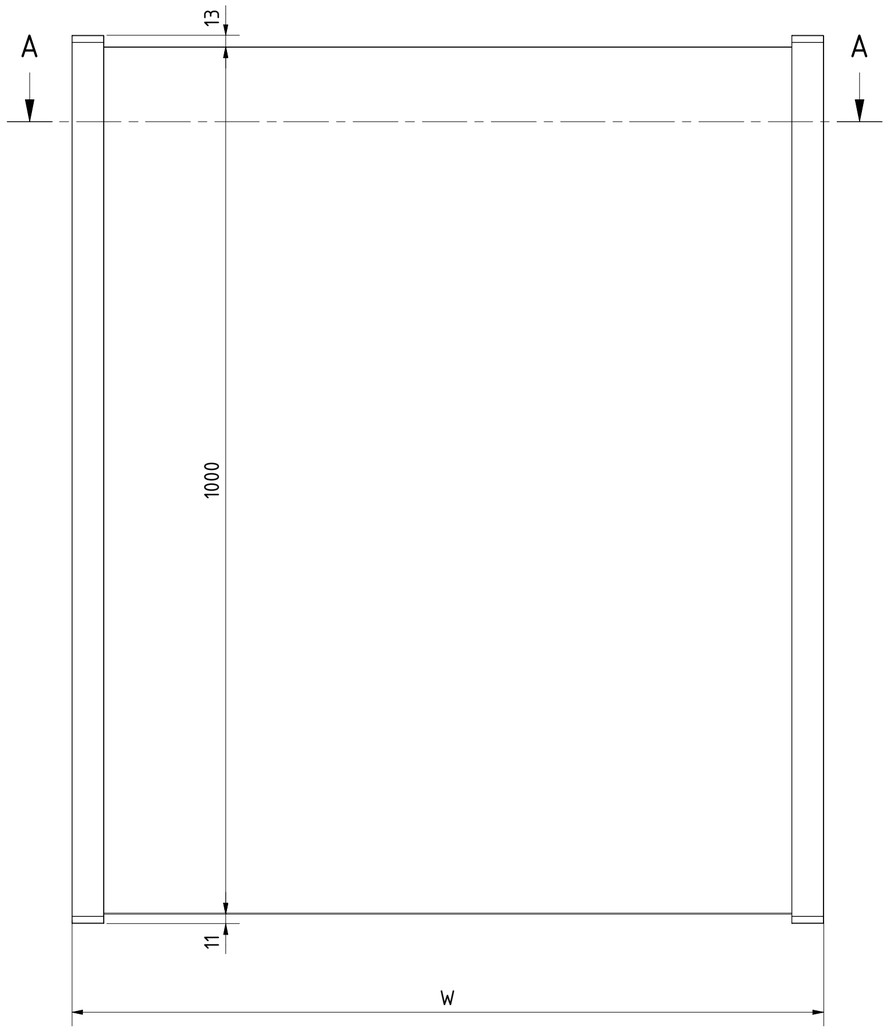

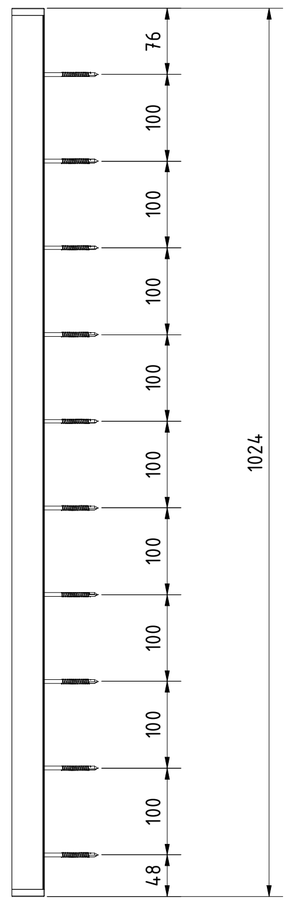

Designed by	Created	Modificated	Comment
Loay	07/03/2023		

ONLEVEL

Description
Skyforce-Slim set incl. glass rubbers for glass 16.76/21.52mm height 1000mm two sides covering, alum. RAL shiny

Article number	Size	Scale
16301001813	A2	1 : 5