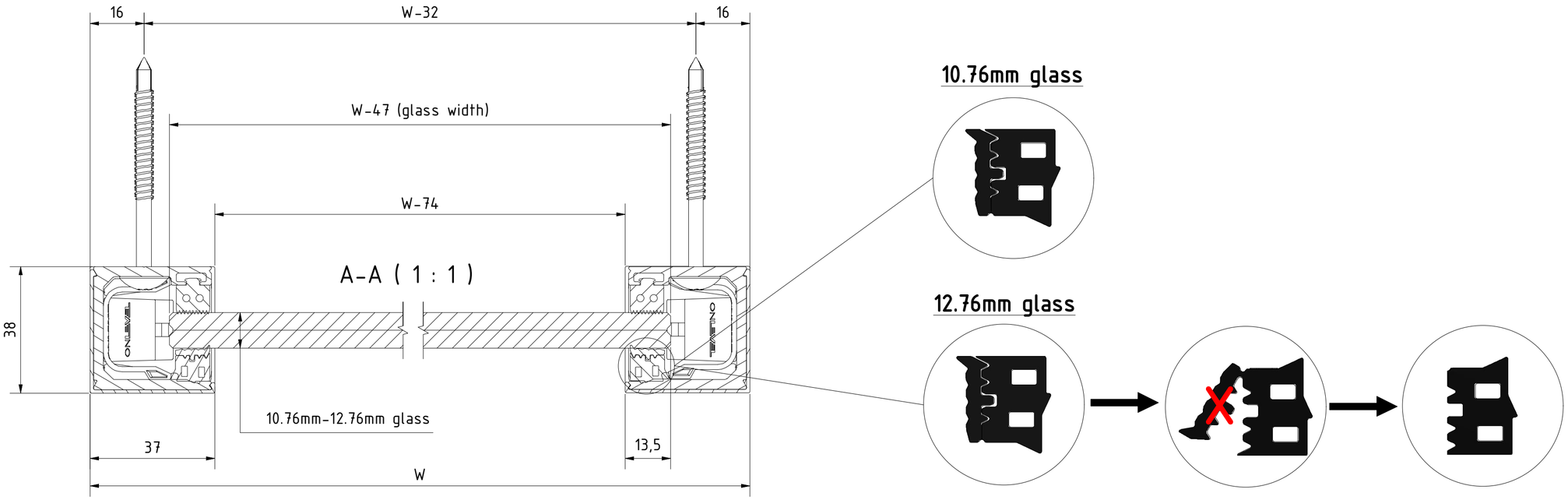

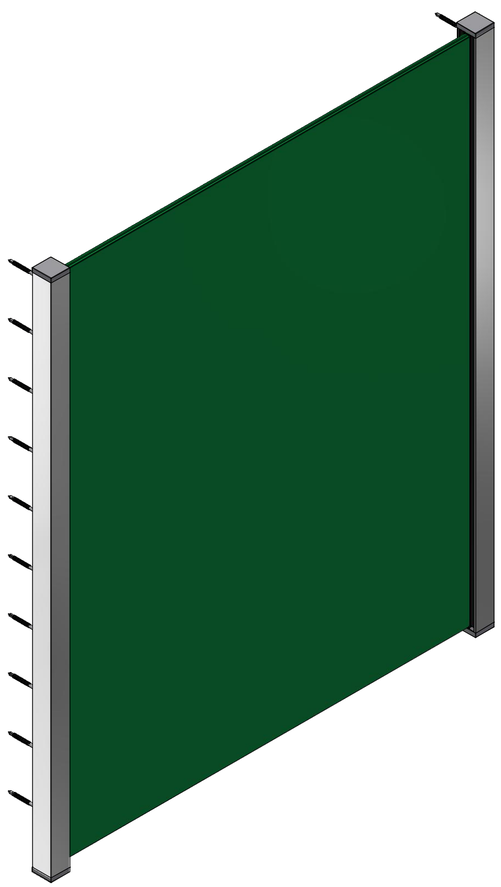

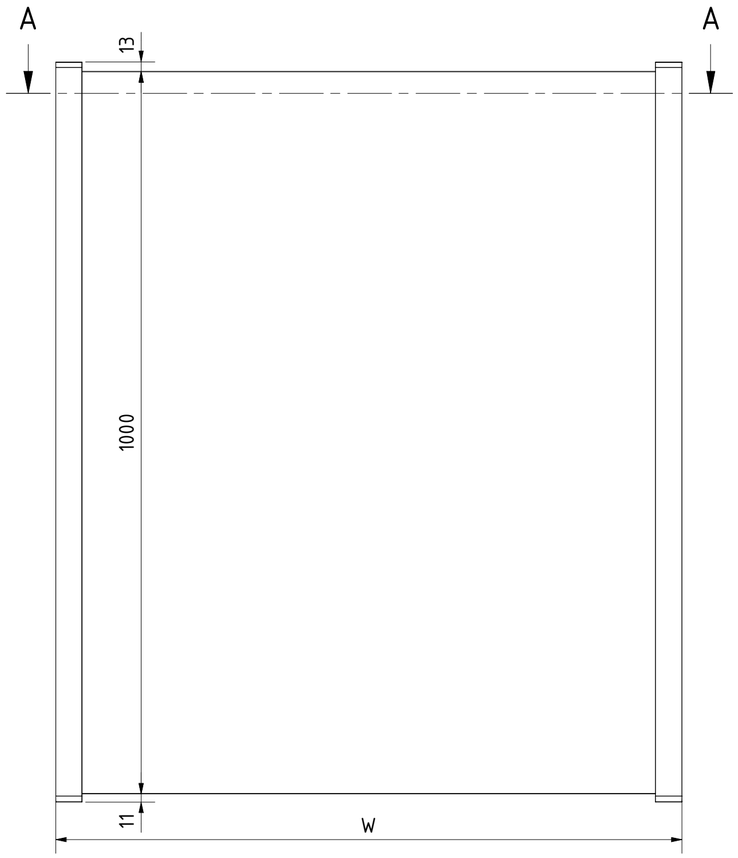

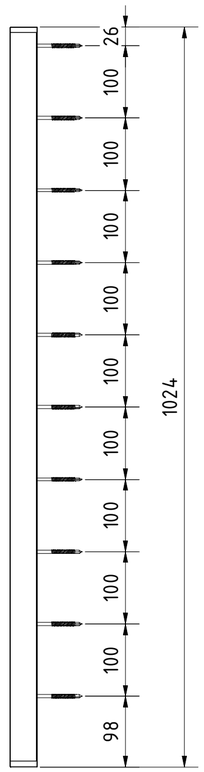

Designed by	Created	Modificated	Comment
Loay	09/03/2023		

ONLEVEL

Description
Skyforce-Slim set incl. glass rubbers for glass 10.76/12.76mm height 1000mm two sides covering, aluminum ARMOR RAL

Article number	Size	Scale
16301001119	A2	1:6