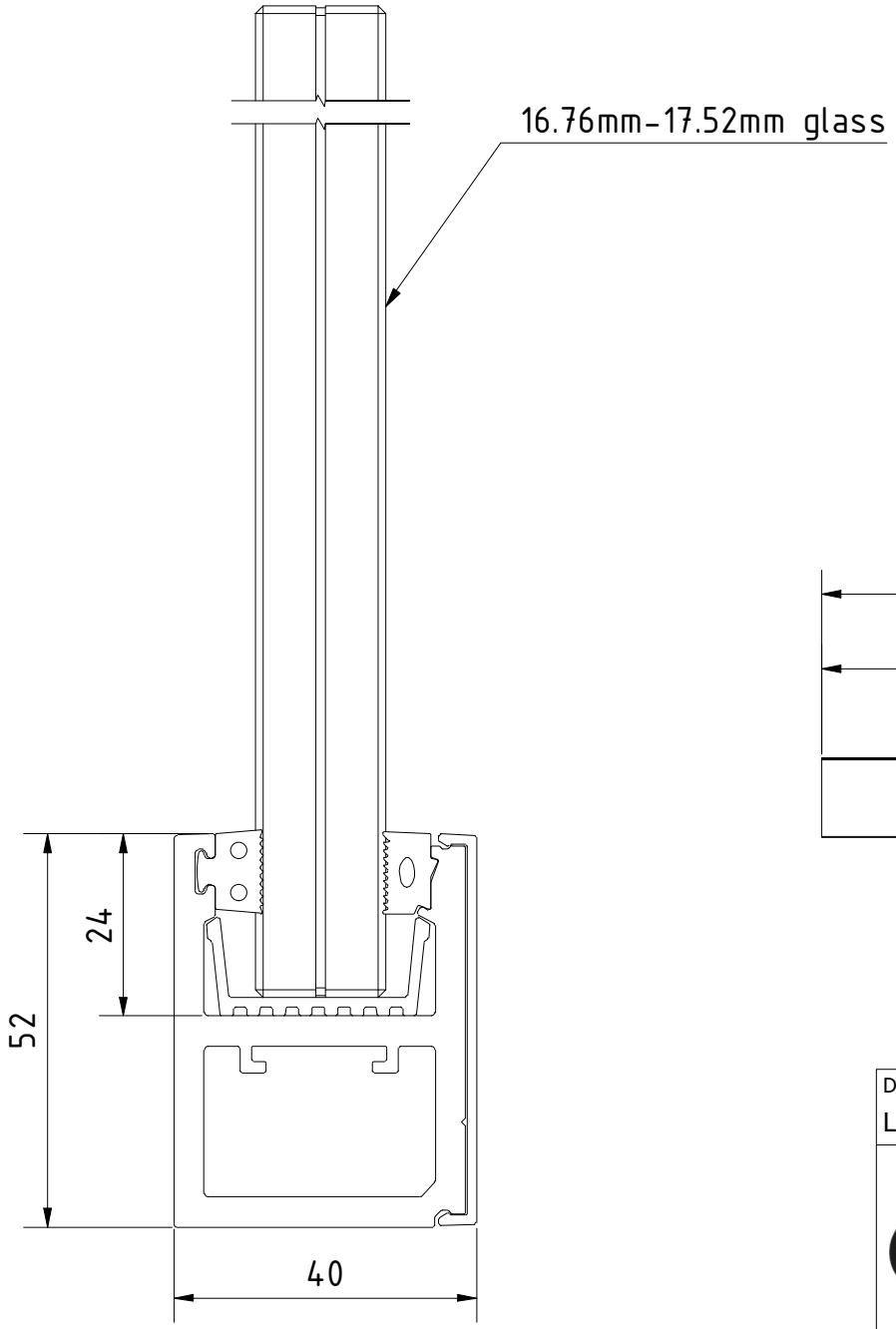

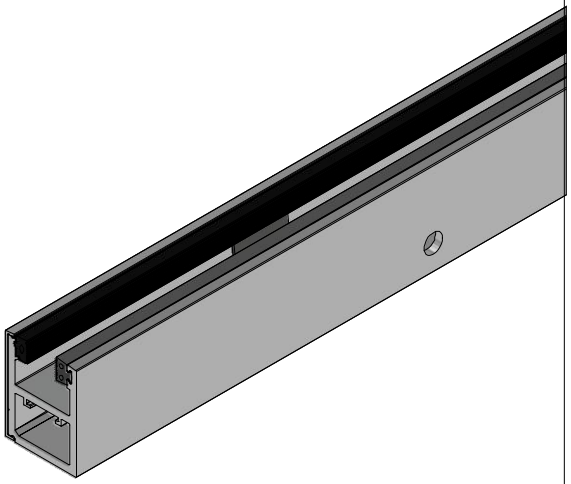

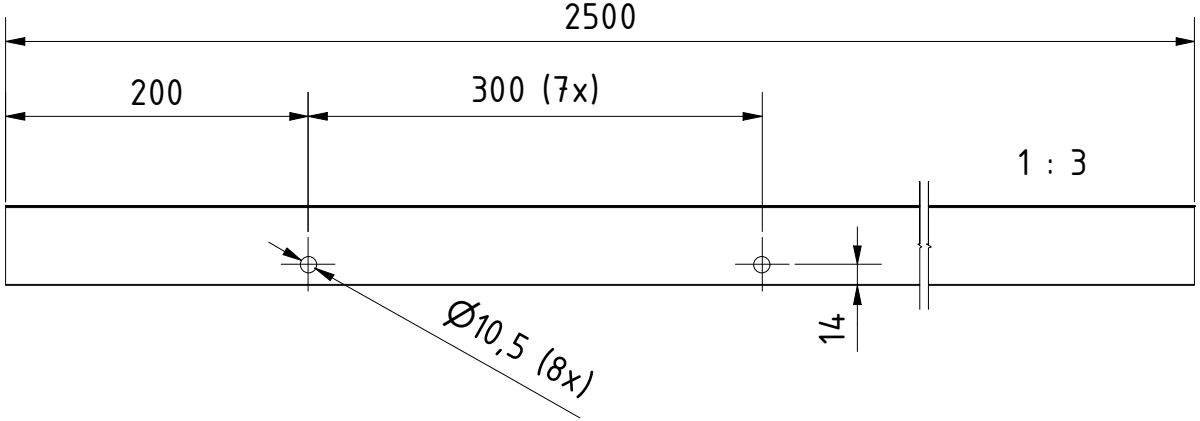

Designed by	Created	Modificated	Comment
Loay	16/05/2023		

ONLEVEL

Description
Kazi-Wall-side profile, glass 16.76mm L=2500mm, aluminum ARMOR RAL

Article number	Size	Scale
20410201719	A4	1 : 1