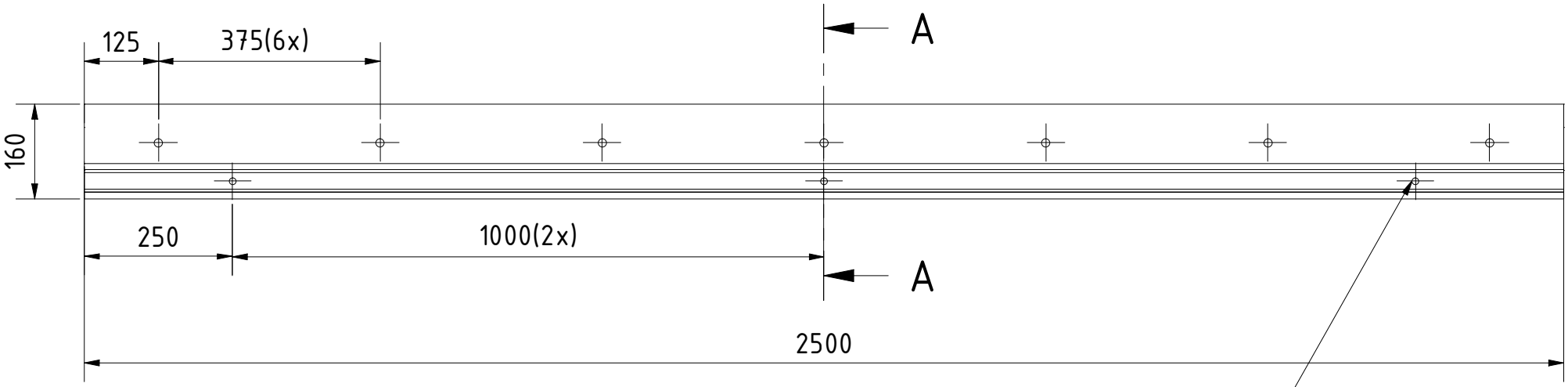

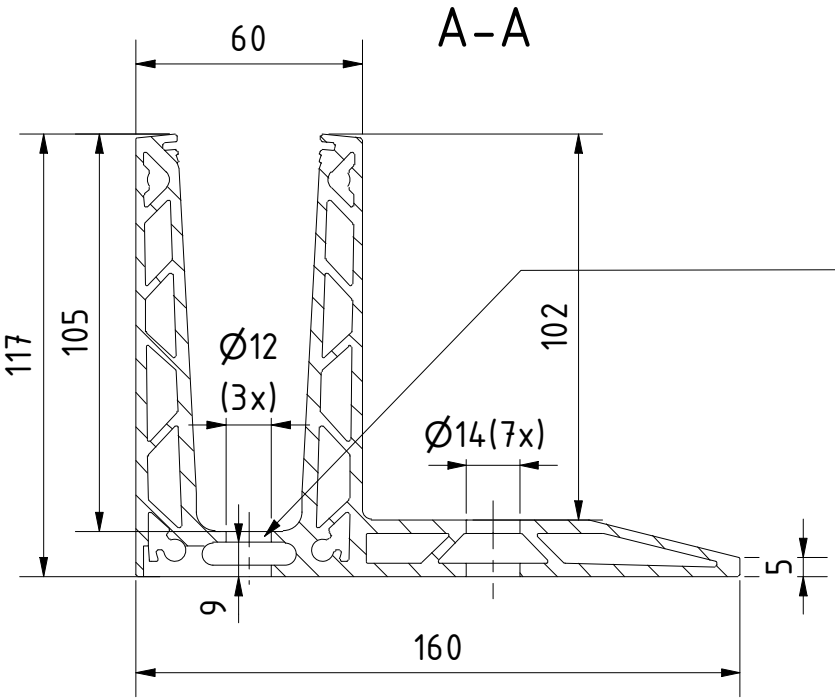

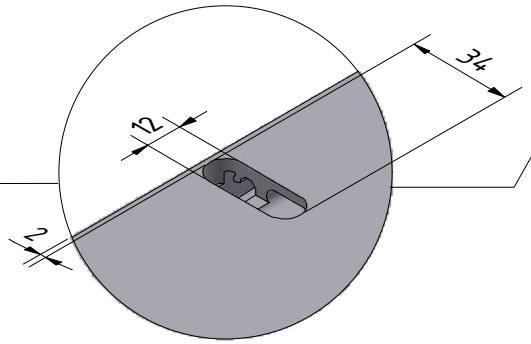

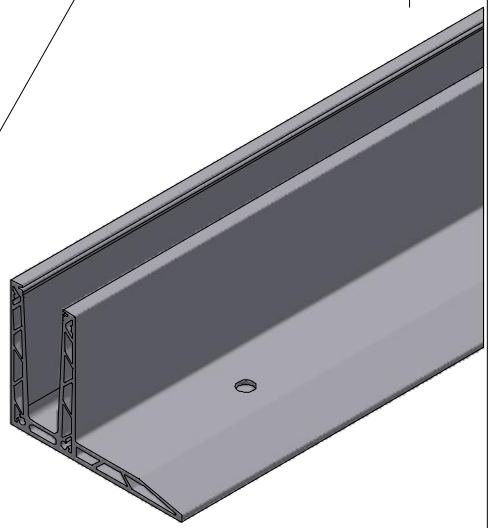

Designed by	Created	Modificated	Comment
KVB	06/03/2022		

ONLEVEL

Description

Glass profile TL-3020, L=2500mm aluminum natural anodized

Article number	Size	Scale
10302000211	A4	/