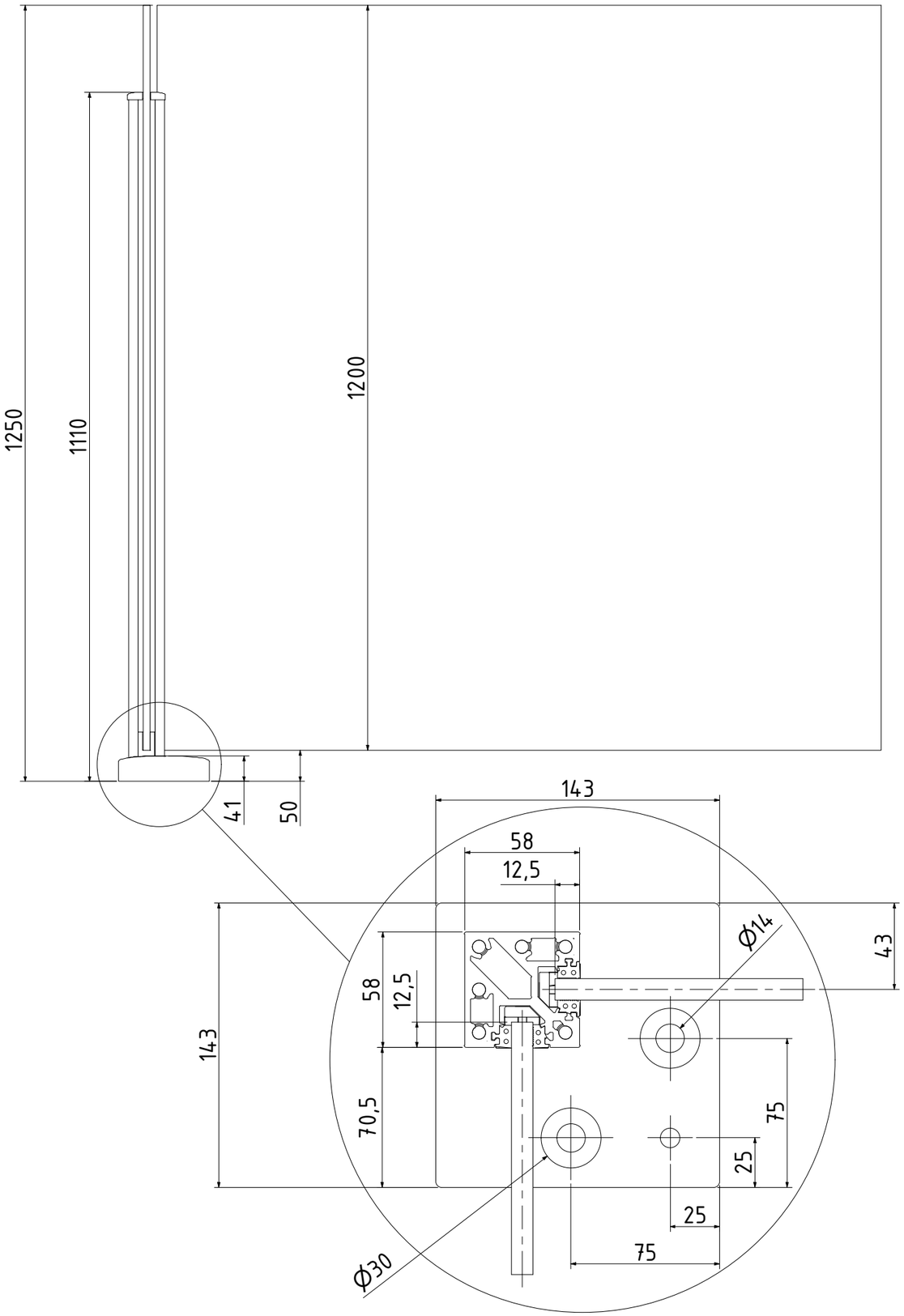


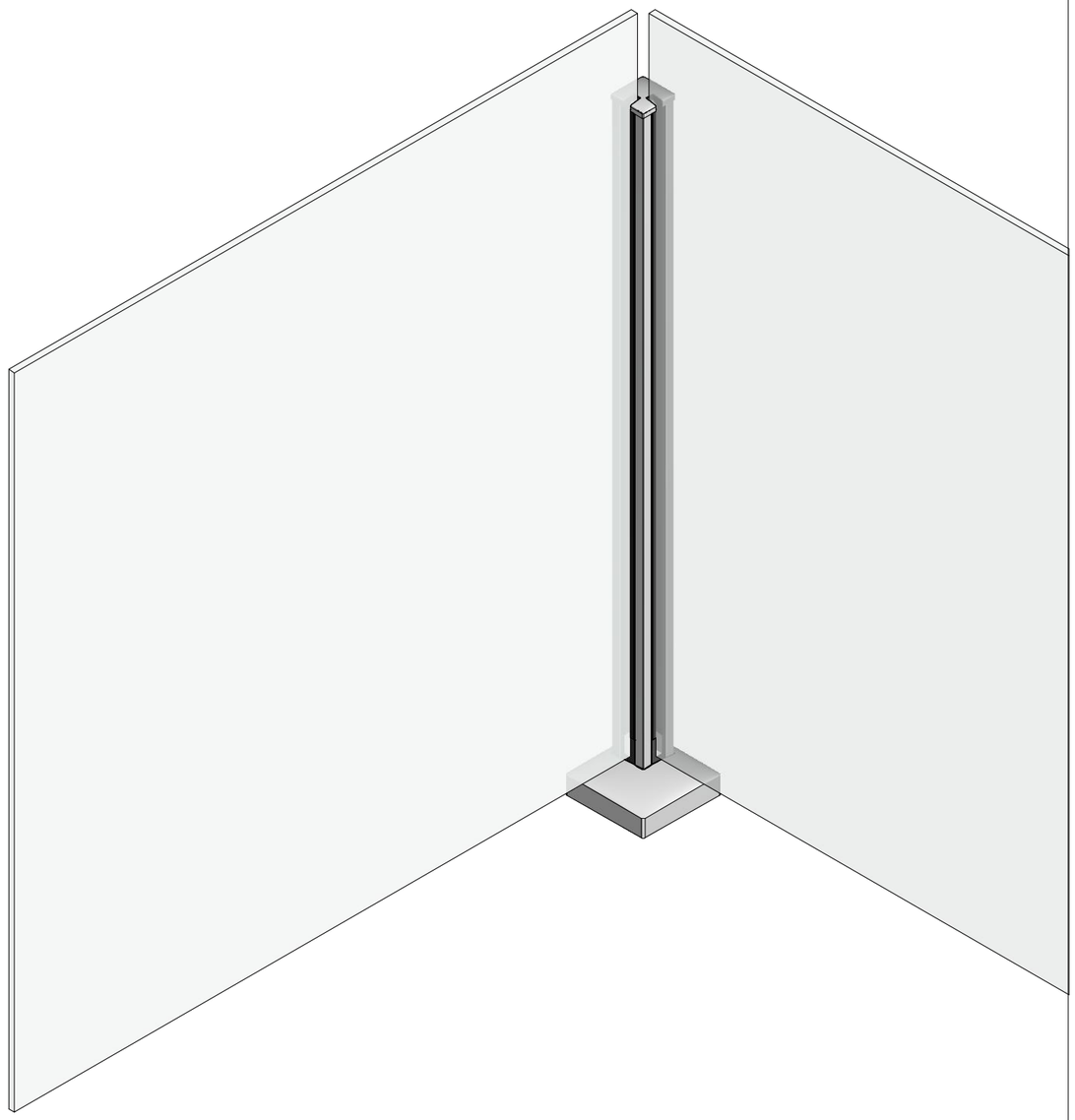

| Designed by | Created | Modificated | Comment |
|---|---|---|---|
| KFM | 21/03/2022 | | |

ONLEVEL

Description
Guardian of the Universe cornerpost top open 58x58mm
H=1100mm glass 10.76mm, aluminum RAL struct.

| Article number | Size | Scale |
|---|---|---|
| 13503211016 | A3 | 1 : 8 |