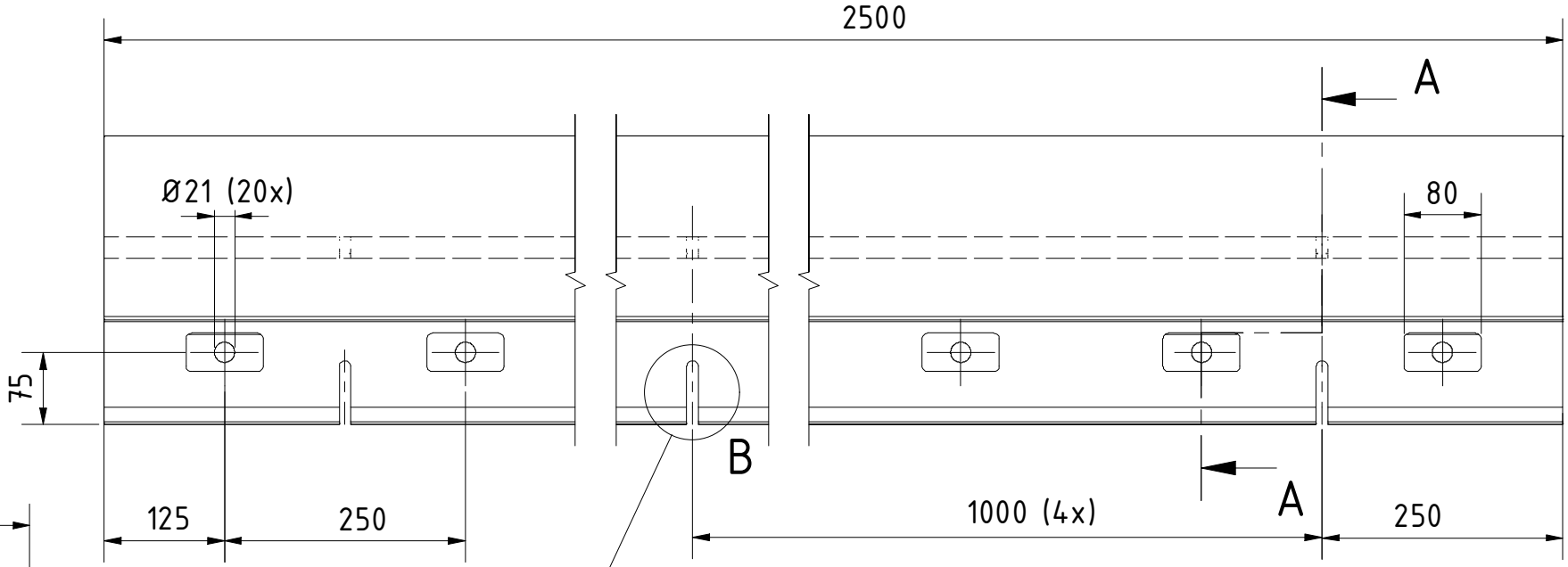

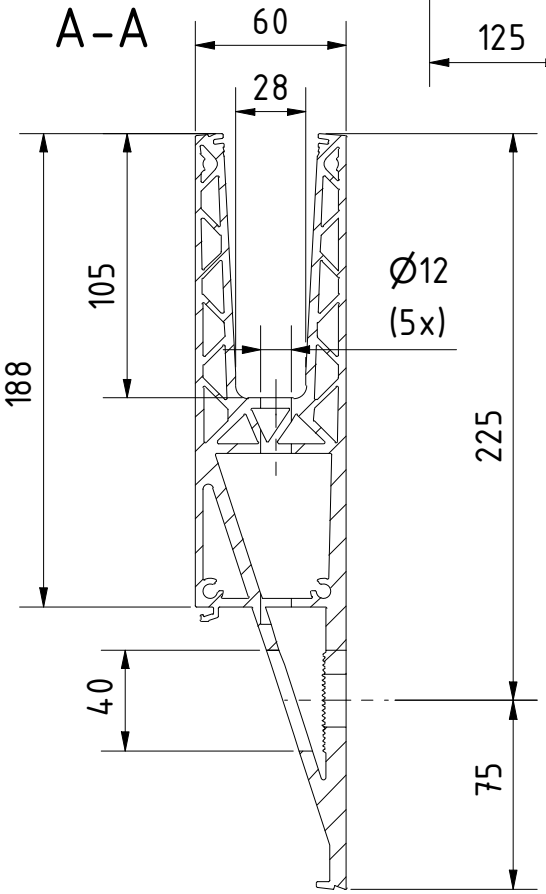

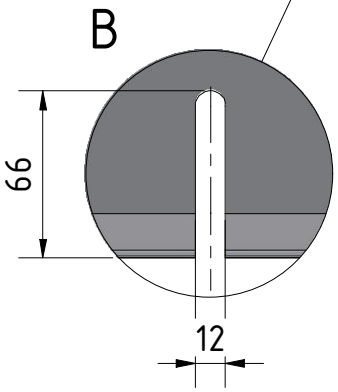

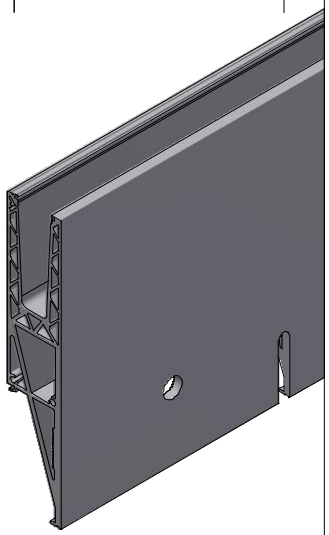

Designed by	Created	Modificated	Comment
Loaya	20/02/2023		

ONLEVEL

Description
Glass profile TL-3121, L=2500mm alum. RAL shiny

Article number	Size	Scale
10312100213	A4	/