1.

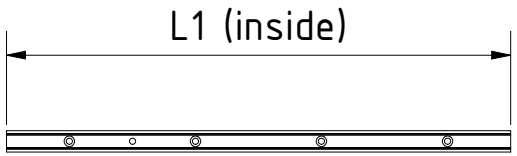

2.

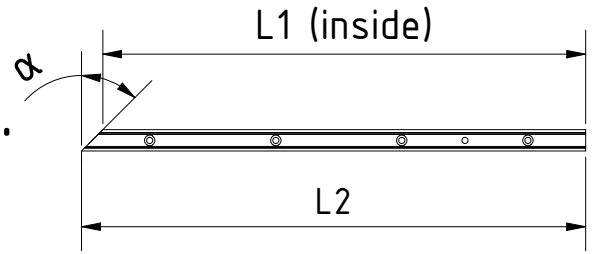

3.

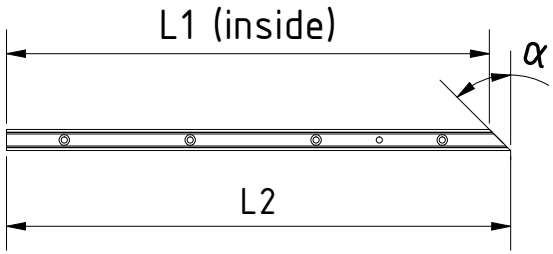

4.

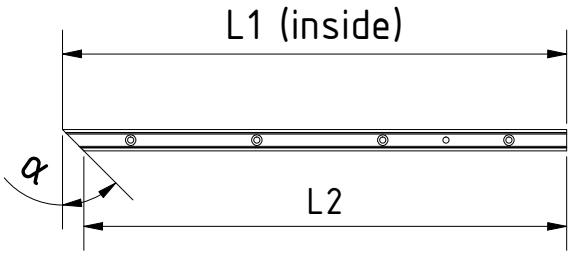

L=5000mm: x= 125mm /d= 250mm (19x)

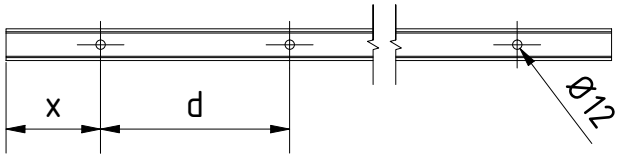

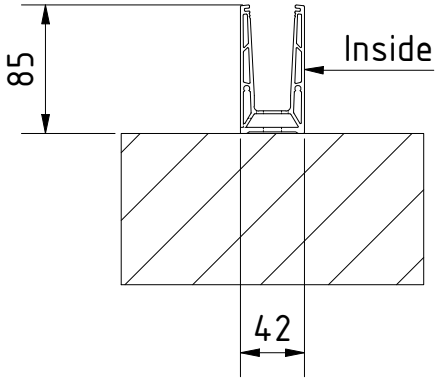

Pos.	Model	L1	L2	α	β	Qty.

Designed by	Created	Modificated	Comment
DW	09.04.2024		

ONLEVEL

Description: Translevel Cutting Overview

Article number	Size	Scale
TL-6500	A4	1 : 15

5.

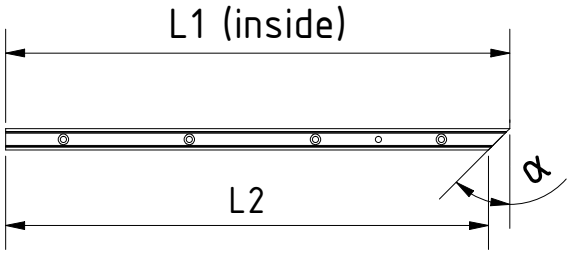

6.

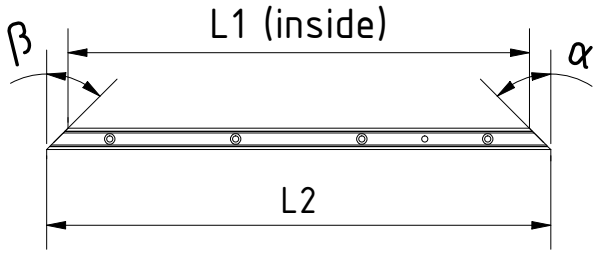

7.

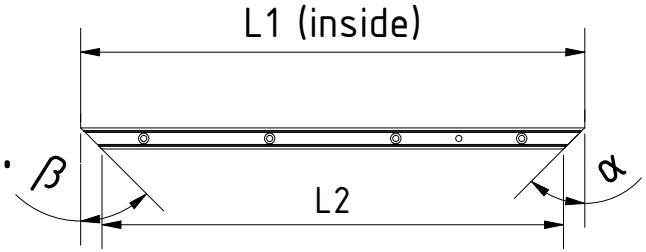

L=5000mm: x= 125mm /d= 250mm (19x)

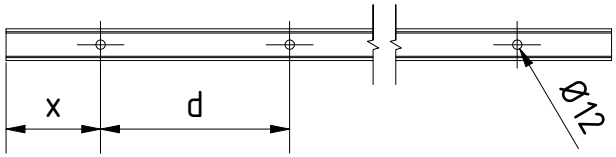

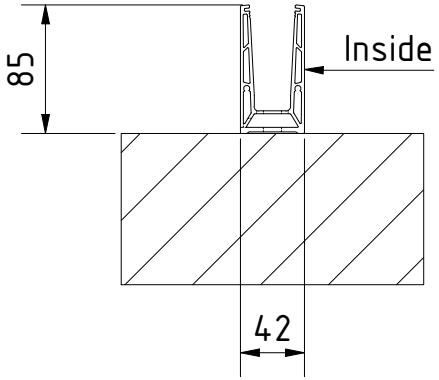

Pos.	Model	L1	L2	α	β	Qty.

Designed by	Created	Modificated	Comment
DW	09.04.2024		

ONLEVEL

Description: Translevel Cutting Overview

Article number	Size	Scale
TL-6500	A4	1 : 15