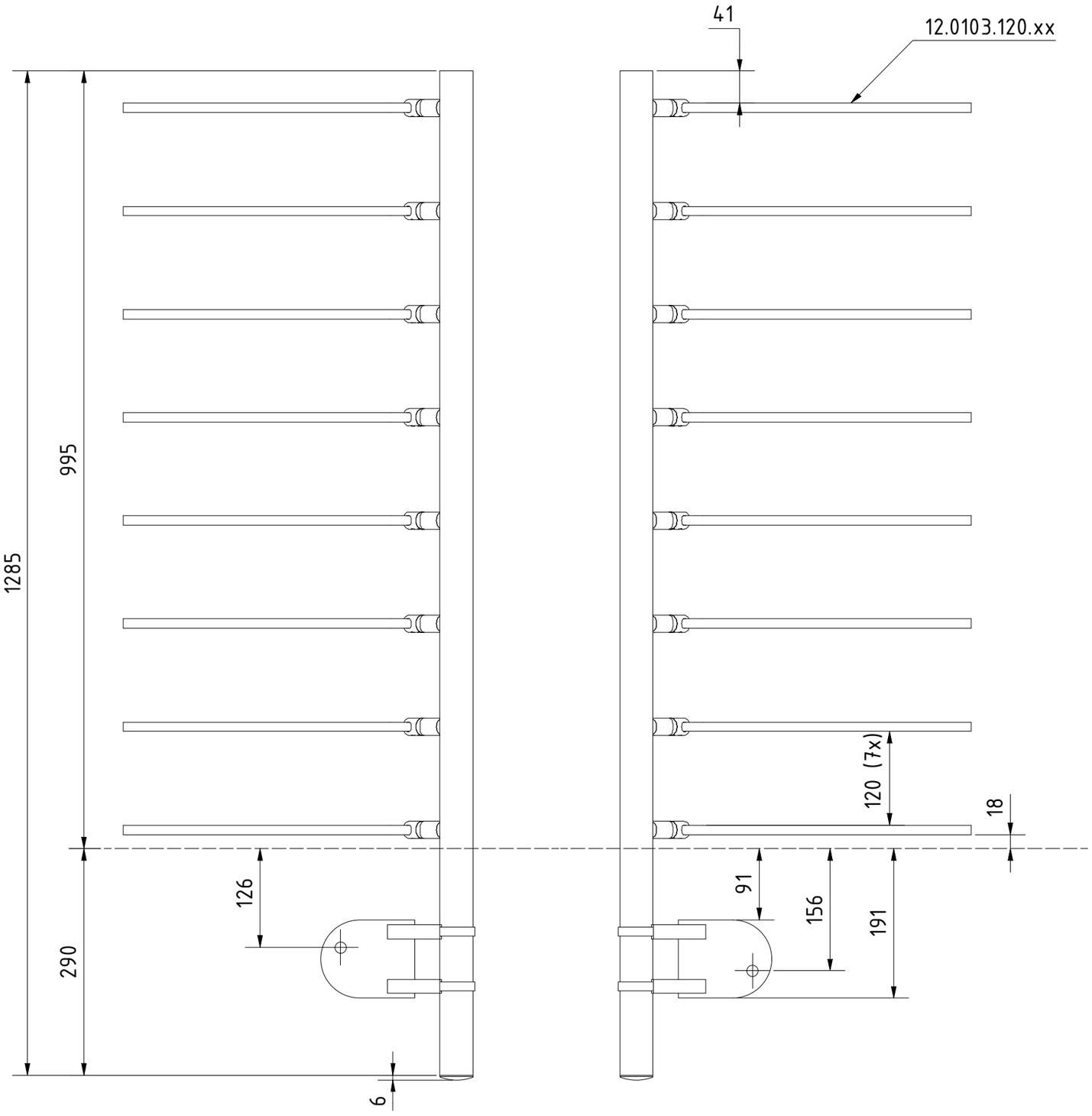

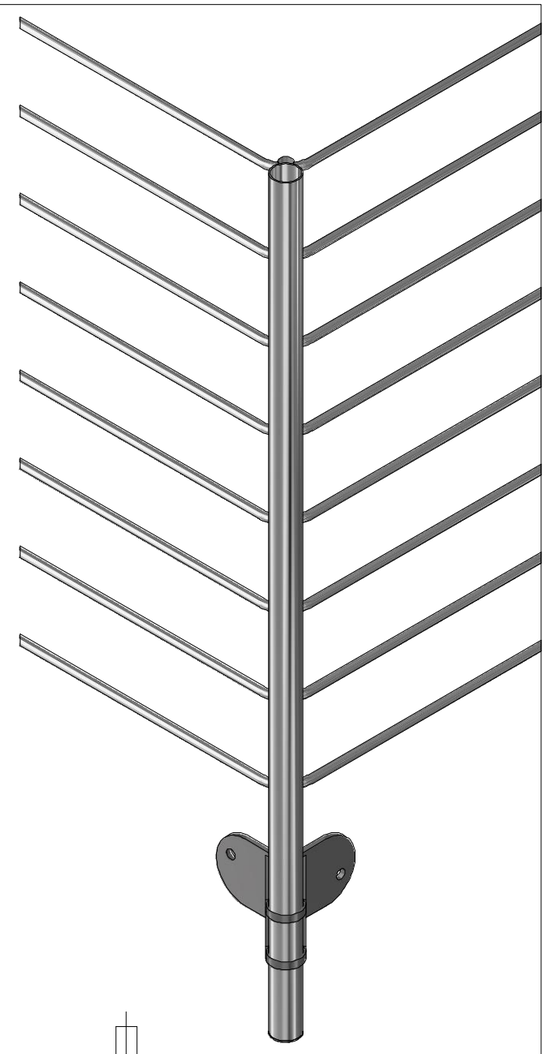

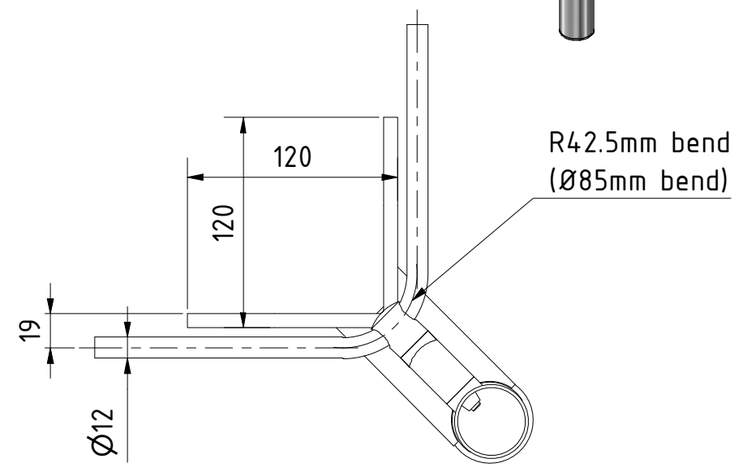

Designed by	Created	Modificated	Comment
Loay	11/09/2024		

ONLEVEL

Description
EMPIRE STATE POST side Ø42.4x2mm H=1285mm Outside corner 90° with crossbar holders, AISI 316 satined

Article number	Size	Scale
12068442231	A3	