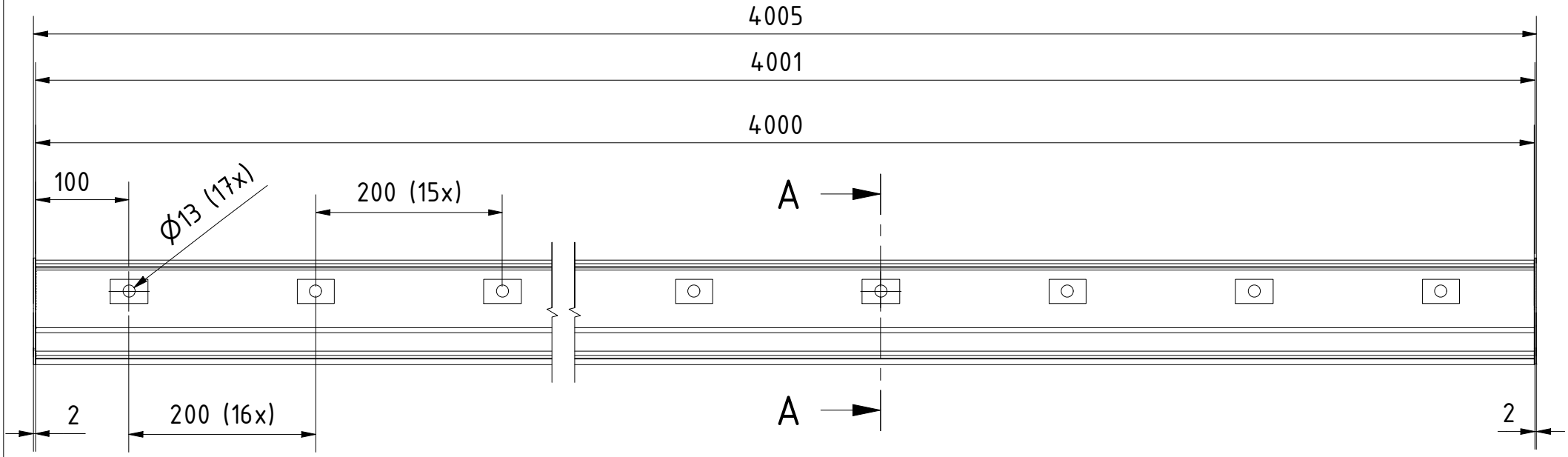

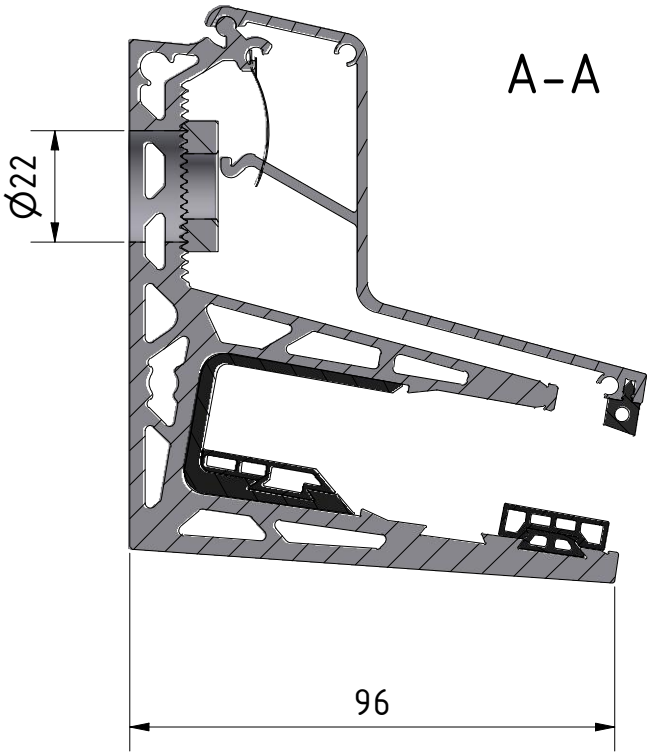

Designed by	Created	Modificated	Comment
FV	15.10.2024		

ONLEVEL

Description
AIRFORCE L=4000mm for glass 17.52/21.52mm, aluminum mill finish

Article number	Size	Scale
17104002010	A4	1 : 6