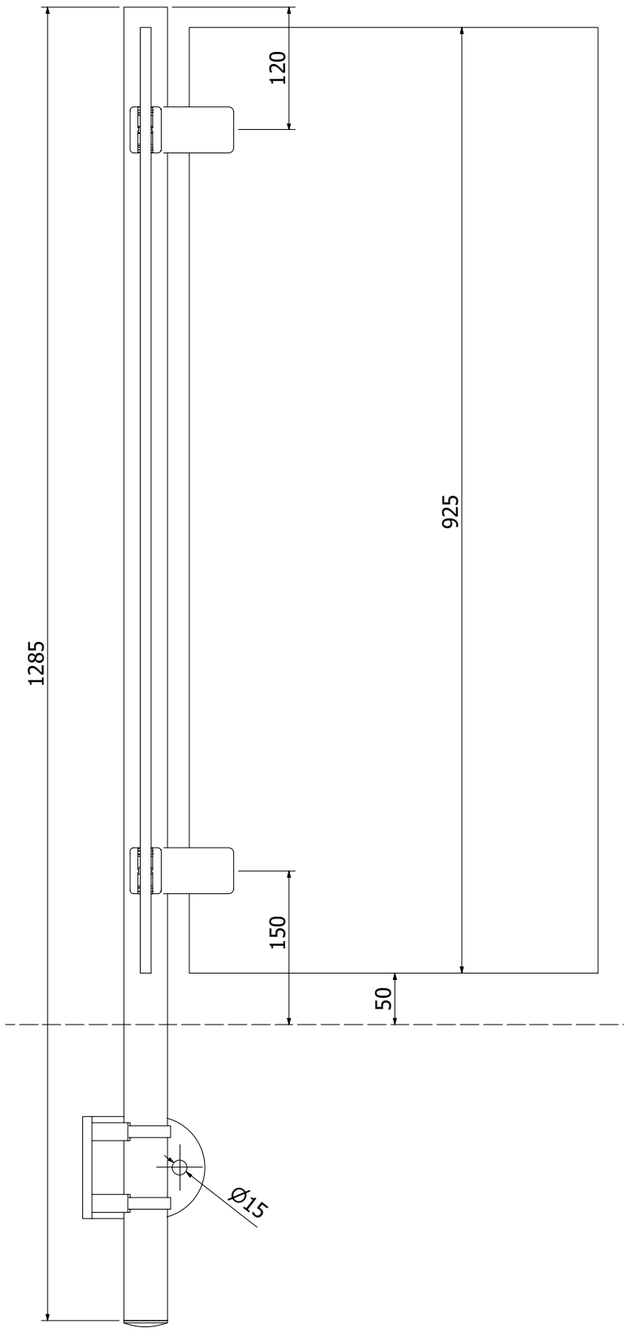

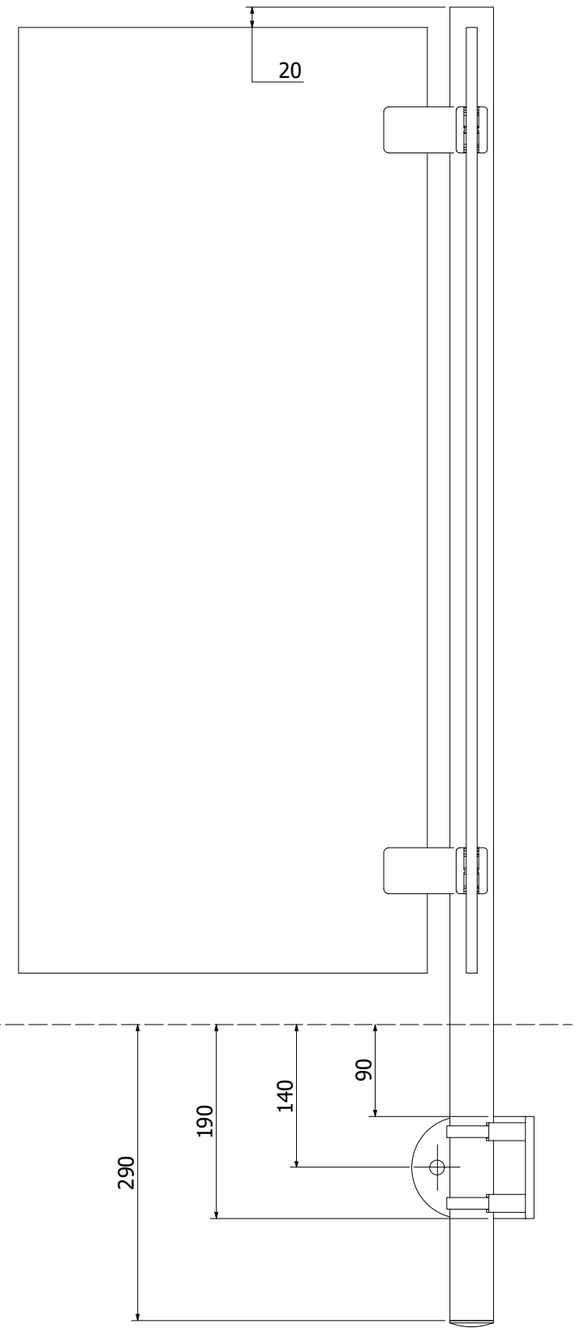

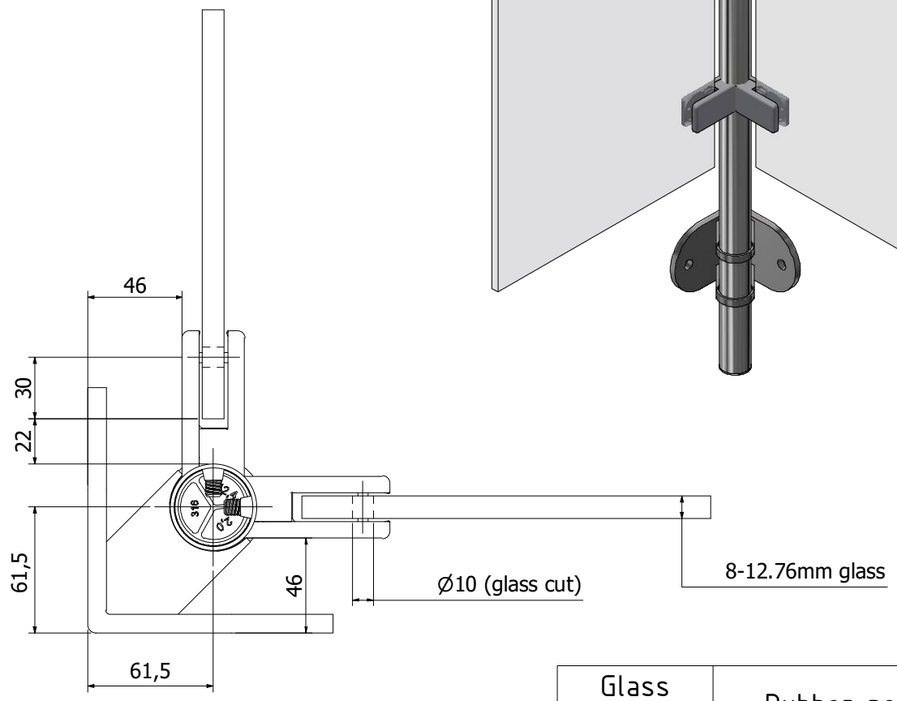

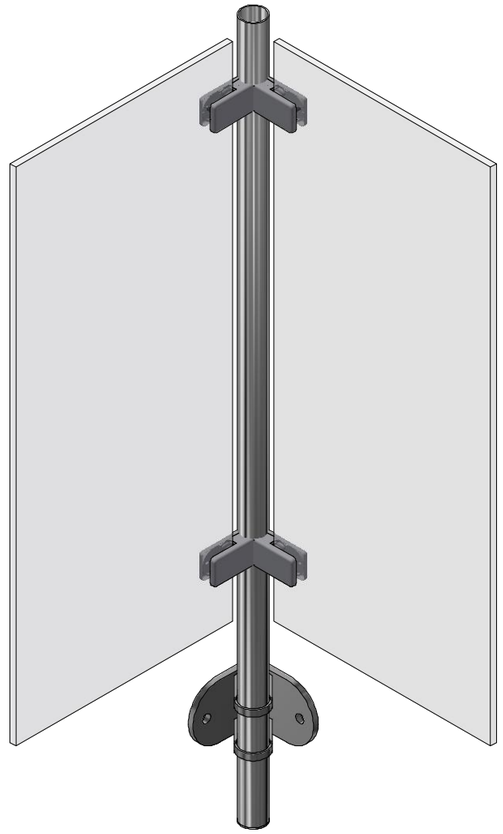

Glass thickness	Rubber needed
8mm	12.9000.008.60
8.76mm	12.9000.009.60
10mm	12.9000.0010.60
10.76mm	12.9000.0011.60
12mm	12.9000.0012.60
12.76mm	12.9000.0013.60

Designed by	Created	Modificated	Comment
Loay	31/07/2024		

ONLEVEL

Description
EMPIRE STATE POST Side Ø42.4x2mm H=1285mm cornerpost 90° inside Kronos square, AISI 316 satined

Article number	Size	Scale
12066342231	A3	